DEKRA Testing & Certification (Suzhou) Co., Ltd.
No.99 Hongye Rd., Suzhou Industrial Park, Suzhou, 215006, Jiangsu, China
TEL: +86-512-62515088 / FAX: +86-512-62515098

DEKRA

Test report No: 2171031R

TEST REPORT
Electromagnetic Compatibility (EMC)-Automotive

Identification of item tested	ELECTRIC AIR PUMP
product reference no	N/A
Model and /or type reference	EP-T16
S/N	N/A
Test Report No.	The data in this report are all quoted from the Report No.: 16084872 001
Applicant´s name / address	ORIENTAL RECREATIONAL PRODUCTS(SHANGHAI) CO.,LTD. No.1699 Da Ye Road, Wu Qiao Fengxian,Shanghai 201402,P.R. China
Test method requested, standard	EN 50498-2010 BS EN 50498-2010
Verdict Summary	In Compliance
Date of issue	2021-08-12
Report template No	Template_ Automotive EMC Report_V1.0

DEKRA Testing and Certification (Suzhou) Co., Ltd.
德凯认证服务(苏州)有限公司
AE测试专用章

INDEX

page

COMPETENCES AND GUARANTEES

DEKRA is a testing laboratory competent to carry out the tests described in this report.

In order to assure the traceability to other national and international laboratories, DEKRA has a calibration and maintenance program for its measurement equipment.

DEKRA guarantees the reliability of the data presented in this report, which is the result of the measurements and the tests performed to the item under test on the date and under the conditions stated in the report and it is based on the knowledge and technical facilities available at DEKRA at the time of performance of the test.

DEKRA is liable to the client for the maintenance of the confidentiality of all information related to the item under test and the results of the test.

The test results presented in this report relate only to the object tested.

IMPORTANT: No parts of this report may be reproduced or quoted out of context, in any form or by any means, except in full, without the previous written permission of DEKRA.

GENERAL CONDITIONS

1. This report is only referred to the item that has undergone the test.
2. This report does not constitute or imply on its own an approval of the product by the Certification Bodies or Competent Authorities.
3. This document is only valid if complete; no partial reproduction can be made without previous written permission of DEKRA.
4. This test report cannot be used partially or in full for publicity and/or promotional purposes without previous written permission of DEKRA.
5. This report is not used for social proof in China (or Mainland China) market.
6. The measurement result is considered in conformance with the requirement if it is within the prescribed limit, it is not necessary to calculate the uncertainty associated with the measurement result.

UNCERTAINTY

For all measurements where guidance for the calculation of the instrumentation uncertainty of a measurement is specified in EN 55016-4-2 (CISPR 16-4-2), ISO 11452, EN/IEC 61000-4 series or a product standard, the measurement instrumentation uncertainty has been calculated and applied in accordance with these standards.

Uncertainties have been calculated according to the DEKRA internal document PROD-P-EMC-M22[w1]. The reported expanded uncertainties are based on a standard uncertainty multiplied by a coverage factor of k=2, providing a level of confidence of approximately 95%. Refer to the Annex 1 for furter information.

ENVIRONMENTAL CONDITIONS

The climatic conditions during the tests are within the limits specified by the manufacturer for the operation of the EUT and the test equipment. The climatic conditions during the tests were within the following limits:

Ambient temperature	23±5 °C
Relative Humidity air	25 % - 75 %; 20 % - 60 %(ESD)
Atmospheric pressure	86 kPa – 106 kPa

If explicitly required in the basic standard or applied product / product family standard the climatic values are recorded and documented separately in this test report.

POSSIBLE TEST CASE VERDICTS

Test case does not apply to test object	N/A
Test object does meet requirement	In Compliance
Test object does not meet requirement	Not In Compliance
Not measured	N/M

DEFINITION OF SYMBOLS USED IN THIS TEST REPORT

☒ Indicates that the listed condition, standard or equipment is applicable for this report/test/EUT.				
☐ Indicates that the listed condition, standard or equipment is not applicable for this report/test/EUT.				
Decimal separator used in this report	☒	Comma (,)	☐	Point (.)

ABBREVIATIONS

For the purposes of the present document, the following abbreviations apply:

DUT	:	Device Under Test
EUT	:	Equipment Under Test
ESA	:	Electrical/electronic sub-assembly
QP	:	Quasi-Peak
CAV	:	CISPR Average
AV	:	Average
CDN	:	Coupling Decoupling Network
SAC	:	Semi-Anechoic Chamber
OATS	:	Open Area Test Site
BW	:	Bandwidth
AM	:	Amplitude Modulation
PM	:	Pulse Modulation
U_N	:	Nominal voltage
T_X	:	Transmitter
R_X	:	Receiver
N/A	:	Not Applicable
N/M	:	Not Measured
BB	:	Broadband
NB	:	Narrowband

DOCUMENT HISTORY

Report no.	Date	Description
2171031R	2021.08.12	First release.

1. GENERAL INFORMATION

1.1. General Description of the Item(s)

Description of the item ..... :	ELECTRIC AIR PUMP
Model / Type number ..... :	EP-T16
Serial number ..... :	N/A
Trademark ..... :	N/A
Manufacturer / Address ..... :	ORIENTAL RECREATIONAL PRODUCTS(SHANGHAI) CO.,LTD. No.1699 Da Ye Road, Wu Qiao Fengxian,Shanghai 201402,P.R. China

Operating voltage..... :	DC 12V			
Rated Power ..... :	110W			
Other parameters..... :	N/A			
Software version ..... :	N/A			
Hardware version..... :	N/A			
Dimensions in cm (W x H x D)..... :	N/A			
Intentional RF transmitter? ..... :	☒	No	☐	Yes (please specify):

Copy of marking plate:


1.2. The environment(s) in which the DUT is intended to be used

The equipment under test (EUT) is intended to be used in the following environment(s):

☒	Vehicular environment.
☐	Residential (domestic) environment.
☐	Commercial and light-industrial environment.
☐	Industrial environment.

1.3. Classification of the DUT

☐	ESA defined as "component".
☒	ESA defined as "STU (Separate Technical Unit)".
☐	ESA with relation to immunity related functions of the vehicle.
☒	ESA without relation to immunity related functions of the vehicle.
☐	ESA must be operational during engine start phases.
☒	ESA must not be operational during engine start phases.

1.4. Immunity related function check

The table below shows whether the DUT is related to immunity related functions of the vehicle or not.

IMMUNITY-RELATED FUNCTIONS	Yes	No
Functions related to the direct control of the vehicle, e.g. degradation or change in engine, gear, brake, suspension, active steering, speed limitation devices; Affecting driver's position, e.g. seat or steering wheel positioning; Affecting driver's visibility: e.g. dipped beam, windscreen wiper.	☐	☒
Functions related to driver, passenger and other road-user protection e.g. airbag and safety restraint systems.	☐	☒
Functions which, when disturbed, cause confusion to the driver or other road users e.g. optical disturbances: incorrect operation of e.g. direction indicators, stop lamps, end outline marker lamps, rear position lamp, light bars for emergency system, wrong information from warning indicators, lamps or displays related to functions in clauses (a) or (b) which might be observed in the direct view of the driver; acoustical disturbances: incorrect operation of anti-theft alarm, horn, for example.	☐	☒
Functions related to vehicle data bus functionality e.g. by blocking data transmission on vehicle data bus-systems, which are used to transmit data, required to ensure the correct functioning of other immunity-related functions.	☐	☒
Functions which, when disturbed, affect vehicle statutory data: e.g. tachograph, odometer.	☐	☒
Electronic equipment products used in the aftermarket of vehicles. For example: car vacuum cleaner, car charger, car electric inflator, car refrigerator, car heater, car audio-visual entertainment products, etc.	☒	☐

2. DESCRIPTION OF TEST SETUP

2.1. Operating mode(s) used for tests

During the tests the following operating mode(s) has(have) been used.

Operating mode	Operating mode description	Used for testing	
		Emission	Immunity
1	The DUT is in operating mode.	☒	☒
Supplemental information:			

3. VERDICT SUMMARY SECTION

This chapter presents an overview of standards and results. Refer to the next chapters for details of measured test results and applied test levels.

3.1. Deviation(s) from the Standard(s) / Test Specification(s)

The following deviation(s) was / were made from the published requirements of the listed standards: N/A.

3.2. Overview of results

EMISSION TESTS				
Ref. Std. Clause	**Requirement – Test case**	**Reference standard(s)**	**Verdict**	**Remark**
7.1 / 7.2	Radiated disturbances	EN 50498-2010 BS EN 50498-2010	In Compliance	---
7.3	Conducted transient disturbances	EN 50498-2010 BS EN 50498-2010	In Compliance	---
Supplementary information:				

IMMUNITY TESTS				
Ref. Std. Clause	**Requirement – Test case**	**Basic standard(s)**	**Verdict**	**Remark**
7.4	Conducted transient immunity	EN 50498-2010 BS EN 50498-2010	In Compliance	---
Supplementary information:				

3.3. Test Matrix

EMISSION TESTS	Mode / Type	
	Mode 1	Mode 2
Radiated disturbances	☒	☐
Conducted transient disturbances	☒	☐
Supplementary information:		

IMMUNITY TESTS	Mode / Type	
	Mode 1	Mode 2
Conducted transient immunity	☒	☐
Supplementary information:		

4. EMISSION TEST RESULTS

4.1. Radiated disturbances	VERDICT: In Compliance

Standard / Regulation	EN 50498-2010，BS EN 50498-2010
Test method	Antenna Method
Antenna polarisation	Horizontal and Vertical
Limits	**Table 1 – Limits for broadband radiated disturbances**

Frequency range F MHz	Limits Quasi peak dBµV/m
30 to 75	62 – 52 [a]
75 to 400	52 – 63 [b]
400 to 1 000	63

[a] Decreasing linearly with the log of the frequency.
[b] Increasing linearly with the log of the frequency.

Table 2 – Limits for narrowband radiated disturbances of ESAs

Frequency range F MHz	Limits Average dBµV/m
30 to 75	52 – 42 [a]
75 to 400	42 – 53 [b]
400 to 1 000	53

[a] Decreasing linearly with the log of the frequency.
[b] Increasing linearly with the log of the frequency.

Performed measurements

Port under test	Harness					
Voltage – Mains [V_{DC}]	☒	13.5	☐	27	☐	Other:
Test method applied	a. Turn on the measurement equipment and allow a sufficient time for stabilization. b. Calibration. Perform the measuring system checking using the measurement system check setup. c. Turn on the EUT and allow a sufficient time for stabilization. Make sure all the functions of DUT are normally before testing. d. EUT Testing. Perform the emission data scan using the measurement setup.					
Test setup	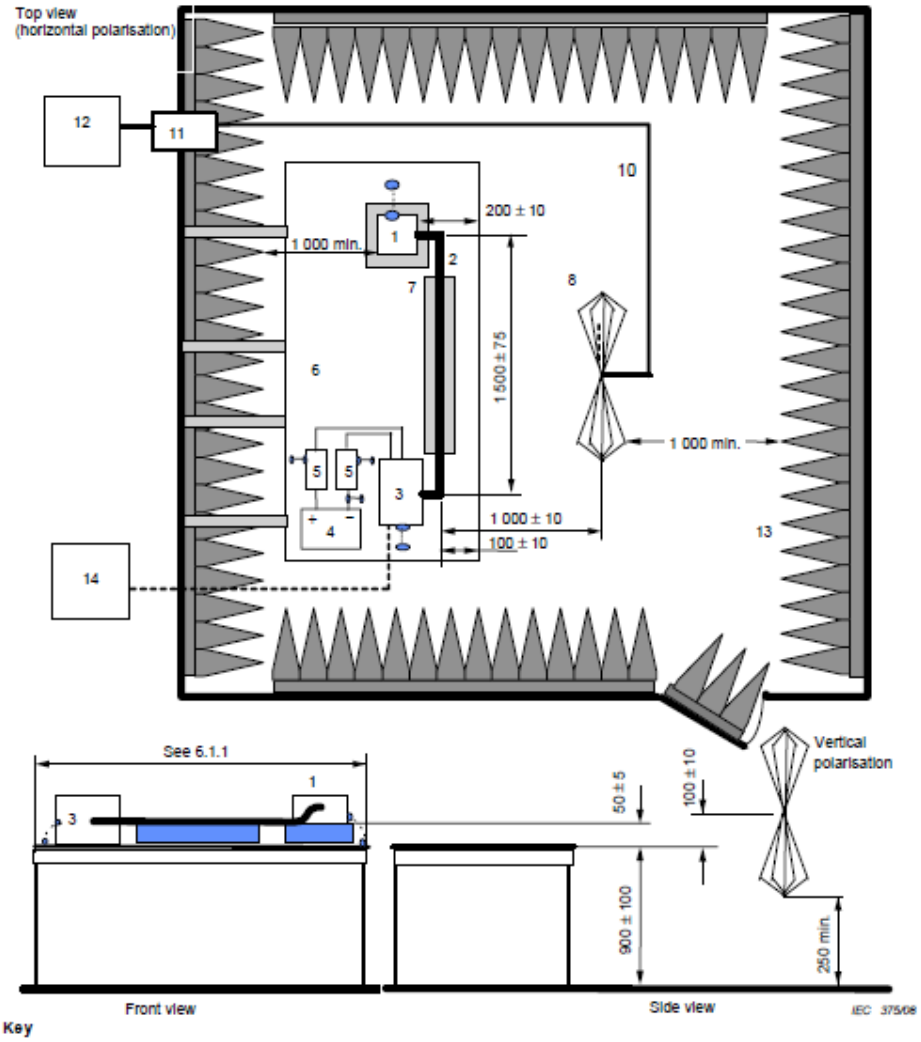 **Key** 1 EUT (grounded locally if required in test plan) 2 Test harness 3 Load simulator (placement and ground connection according to 6.4.2.5) 4 Power supply (location optional) 5 Artificial network (AN) 6 Ground plane (bonded to shielded enclosure) 7 Low relative permittivity support ($\varepsilon_r \leq 1{,}4$) 8 Biconical antenna 10 High-quality coaxial cable e.g. double-shielded (50 Ω) 11 Bulkhead connector 12 Measuring instrument 13 RF absorber material 14 Stimulation and monitoring system **Figure 13 – Example of test set-up – biconical antenna**					

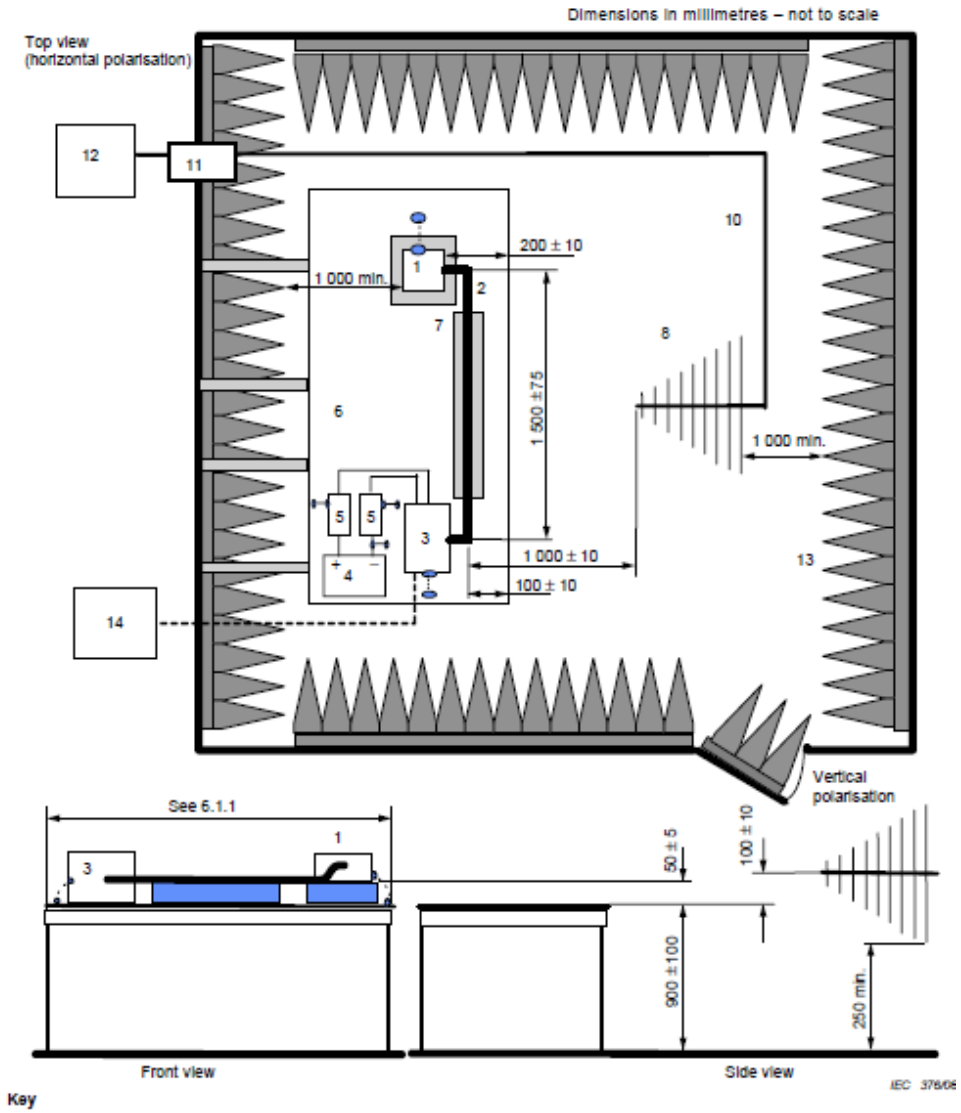

Key

1 EUT (grounded locally if required in test plan)
2 Test harness
3 Load simulator (placement and ground connection according to 6.4.2.5)
4 Power supply (location optional)
5 Artificial network (AN)
6 Ground plane (bonded to shielded enclosure)
7 Low relative permittivity support ($\varepsilon_r \leq 1{,}4$)
8 Log-periodic antenna
10 High-quality coaxial cable e.g. double-shielded (50 Ω)
11 Bulkhead connector
12 Measuring instrument
13 RF absorber material
14 Stimulation and monitoring system

Figure 14 – Example of test set-up – log-periodic antenna

Refer to the Annex 3 for test setup photo(s).

Operating mode(s) used	Mode 1
Remark	---

Measurement data(RE 30-300MHz Hor)	☒	**Horizontal**	☐	**Vertical**
Operating mode / voltage	Mode 1 / DC 12V			

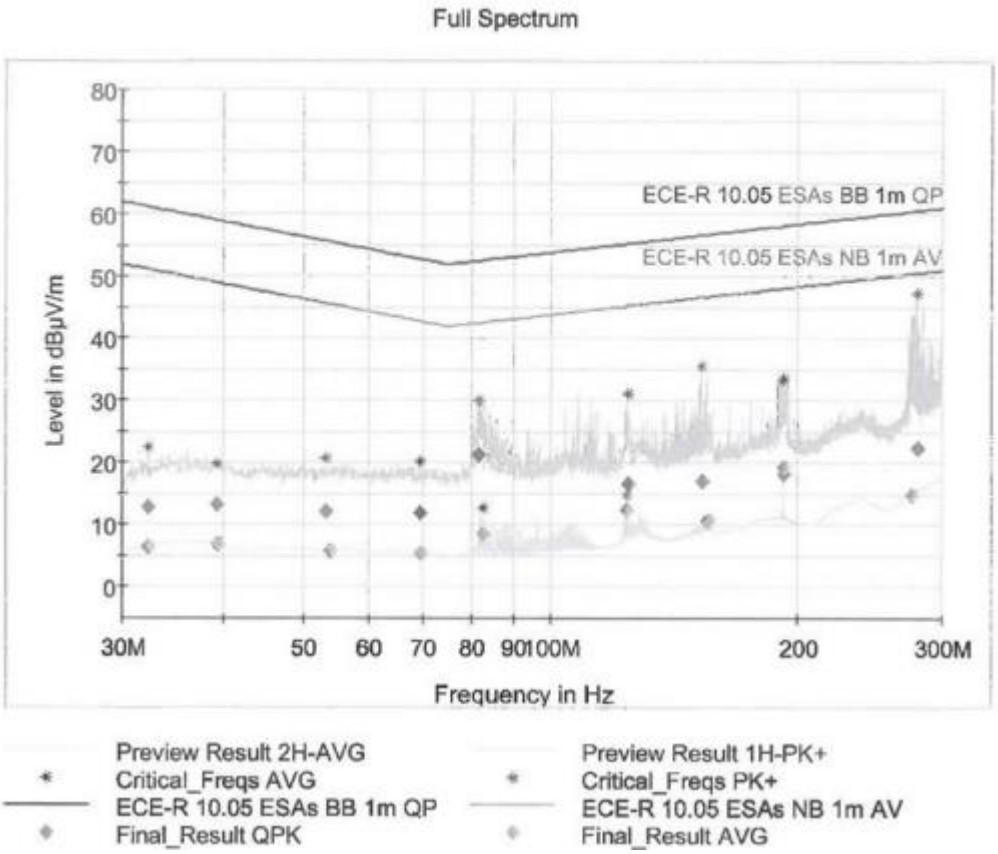

Final_Result

Frequency (MHz)	QuasiPeak (dBµV/m)	Average (dBµV/m)	Limit (dBµV/m)	Margin (dB)	Meas. Time (ms)	Bandwidth (kHz)	Pol	Corr. (dB)	Comment
32.280000	---	6.43	51.20	44.77	1000.0	120.000	H	12.8	22:37:09 - 9/5/2017
32.340000	13.06	---	61.18	48.12	1000.0	120.000	H	12.8	22:35:34 - 9/5/2017
39.160000	13.53	---	59.09	45.56	1000.0	120.000	H	13.3	22:35:44 - 9/5/2017
39.340000	---	6.98	49.04	42.06	1000.0	120.000	H	13.3	22:37:19 - 9/5/2017
53.340000	12.35	---	55.72	43.37	1000.0	120.000	H	12.1	22:35:55 - 9/5/2017
54.000000	---	5.91	45.59	39.68	1000.0	120.000	H	12.2	22:37:28 - 9/5/2017
69.300000	12.13	---	52.86	40.73	1000.0	120.000	H	11.8	22:36:06 - 9/5/2017
69.480000	---	5.54	42.83	37.29	1000.0	120.000	H	11.8	22:37:38 - 9/5/2017
81.620000	21.39	---	52.56	31.17	1000.0	120.000	H	11.0	22:36:17 - 9/5/2017
82.700000	---	8.61	42.64	34.03	1000.0	120.000	H	10.8	22:37:48 - 9/5/2017
124.000000	---	12.54	45.30	32.76	1000.0	120.000	H	13.5	22:37:57 - 9/5/2017
124.060000	16.79	---	55.31	38.52	1000.0	120.000	H	13.5	22:36:28 - 9/5/2017
153.100000	17.24	---	56.69	39.45	1000.0	120.000	H	14.6	22:36:38 - 9/5/2017
155.680000	---	10.56	46.80	36.24	1000.0	120.000	H	14.6	22:38:07 - 9/5/2017
192.680000	---	19.45	48.20	28.75	1000.0	120.000	H	17.0	22:38:17 - 9/5/2017
192.920000	18.41	---	58.21	39.8	1000.0	120.000	H	16.9	22:36:49 - 9/5/2017
275.520000	---	15.08	50.55	35.47	1000.0	120.000	H	21.2	22:38:26 - 9/5/2017
279.360000	22.52	---	60.64	38.12	1000.0	120.000	H	21.6	22:36:59 - 9/5/2017

Remark	

Measurement data(RE 30-300MHz Ver)	☐	**Horizontal**	☒	**Vertical**
Operating mode / voltage	Mode 1 / DC 12V			

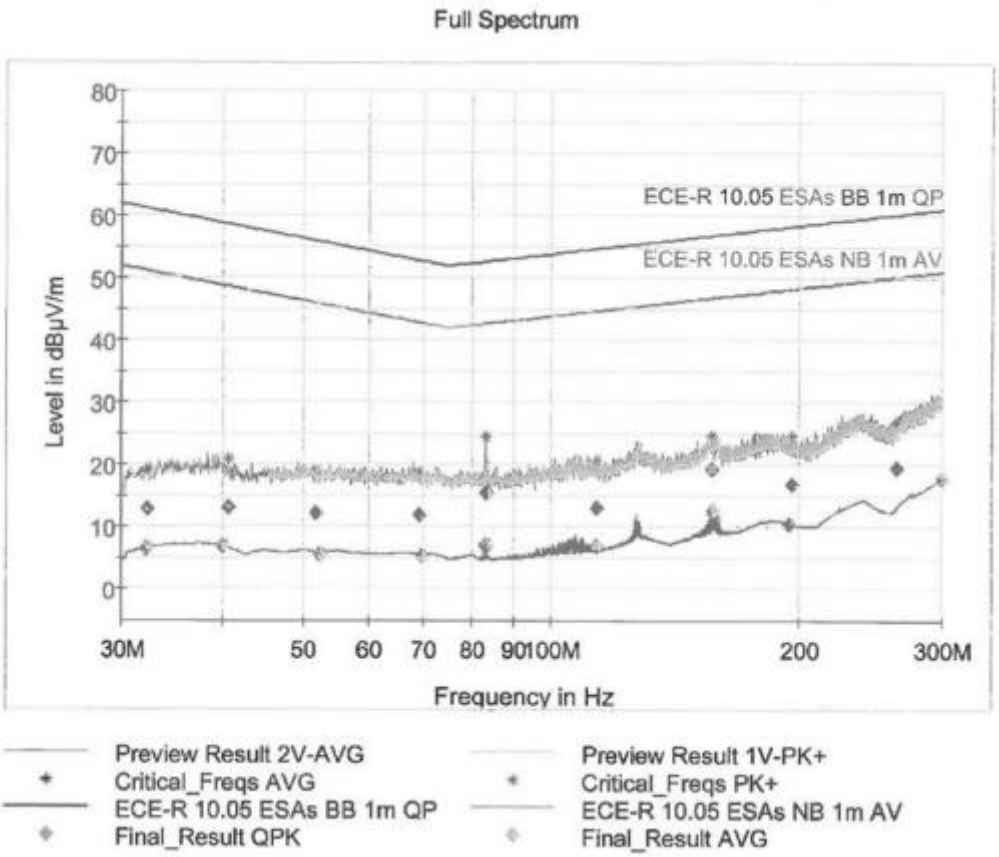

Final_Result

Frequency (MHz)	QuasiPeak (dBµV/m)	Average (dBµV/m)	Limit (dBµV/m)	Margin (dB)	Meas. Time (ms)	Bandwidth (kHz)	Pol	Corr. (dB)	Comment
32.220000	---	6.45	51.22	44.77	1000.0	120.000	V	12.7	22:17:27 - 9/5/2017
32.340000	13.04	---	61.18	48.14	1000.0	120.000	V	12.8	22:15:52 - 9/5/2017
40.000000	---	6.97	48.86	41.89	1000.0	120.000	V	13.2	22:17:37 - 9/5/2017
40.600000	13.16	---	58.70	45.54	1000.0	120.000	V	12.8	22:16:03 - 9/5/2017
51.780000	12.41	---	56.04	43.63	1000.0	120.000	V	12.0	22:16:14 - 9/5/2017
52.560000	---	5.66	45.88	40.22	1000.0	120.000	V	11.9	22:17:46 - 9/5/2017
69.060000	12.08	---	52.90	40.82	1000.0	120.000	V	11.8	22:16:24 - 9/5/2017
69.780000	---	5.53	42.79	37.26	1000.0	120.000	V	11.8	22:17:56 - 9/5/2017
83.240000	15.72	---	52.68	36.96	1000.0	120.000	V	10.8	22:16:35 - 9/5/2017
83.240000	---	6.90	42.68	35.78	1000.0	120.000	V	10.8	22:18:05 - 9/5/2017
113.440000	---	6.89	44.72	37.83	1000.0	120.000	V	12.1	22:18:15 - 9/5/2017
113.740000	13.19	---	54.74	41.55	1000.0	120.000	V	12.2	22:16:46 - 9/5/2017
156.880000	19.46	---	56.85	37.39	1000.0	120.000	V	14.7	22:16:56 - 9/5/2017
157.300000	---	12.80	46.87	34.07	1000.0	120.000	V	14.7	22:18:25 - 9/5/2017
194.660000	---	10.49	48.27	37.78	1000.0	120.000	V	16.8	22:18:34 - 9/5/2017
196.640000	17.00	---	58.33	41.33	1000.0	120.000	V	16.6	22:17:07 - 9/5/2017
263.760000	19.65	---	60.26	40.61	1000.0	120.000	V	19.4	22:17:17 - 9/5/2017
300.000000	---	17.78	51.11	33.33	1000.0	120.000	V	24.1	22:18:44 - 9/5/2017

Remark	

Measurement data(RE 300-1000MHz Hor)	☒	**Horizontal**	☐	**Vertical**
Operating mode / voltage	Mode 1 / DC 12V			

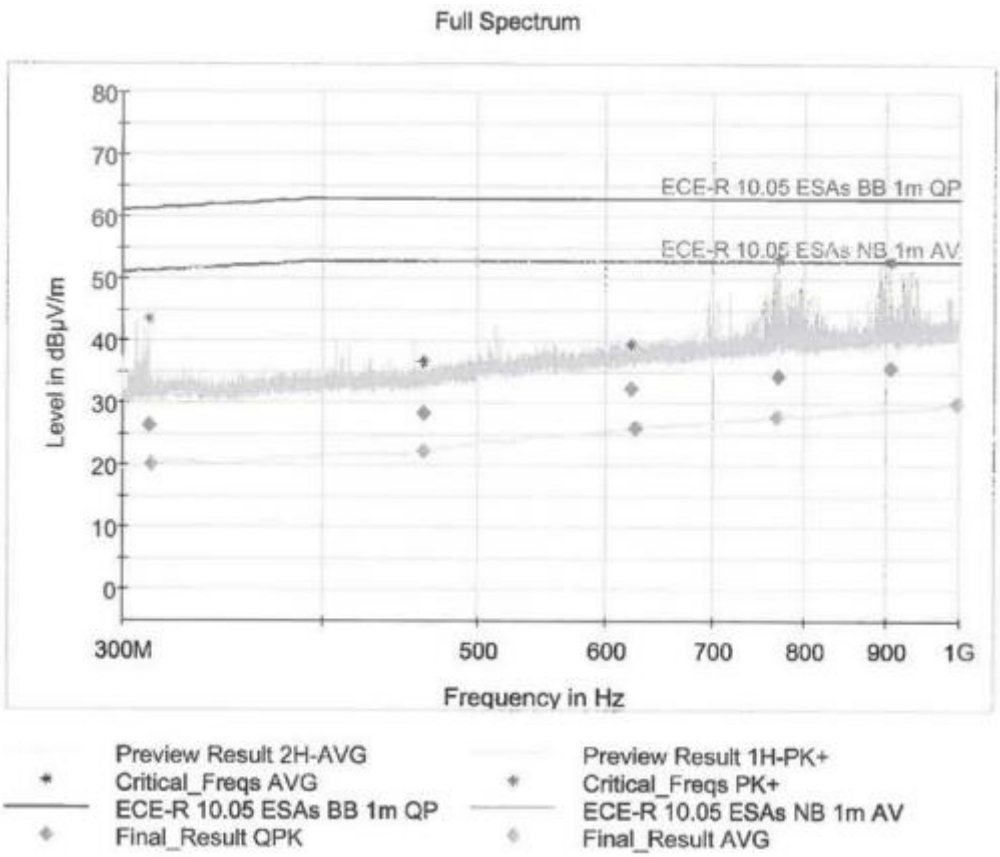

Final_Result

Frequency (MHz)	QuasiPeak (dBµV/m)	Average (dBµV/m)	Limit (dBµV/m)	Margin (dB)	Meas. Time (ms)	Bandwidth (kHz)	Pol	Corr. (dB)	Comment
311.580000	26.53	---	61.36	34.83	1000.0	120.000	H	16.9	22:53:51 - 9/5/2017
313.020000	---	20.25	51.39	31.14	1000.0	120.000	H	16.9	22:54:45 - 9/5/2017
462.520000	28.52	---	63.00	34.48	1000.0	120.000	H	19.0	22:54:02 - 9/5/2017
462.760000	---	22.36	53.00	30.64	1000.0	120.000	H	19.0	22:54:55 - 9/5/2017
621.960000	32.60	---	63.00	30.4	1000.0	120.000	H	22.3	22:54:14 - 9/5/2017
625.440000	---	26.11	53.00	26.89	1000.0	120.000	H	22.4	22:55:05 - 9/5/2017
768.760000	---	27.93	53.00	25.07	1000.0	120.000	H	24.2	22:55:15 - 9/5/2017
769.840000	34.60	---	63.00	28.4	1000.0	120.000	H	24.3	22:54:25 - 9/5/2017
905.020000	35.77	---	63.00	27.23	1000.0	120.000	H	25.1	22:54:35 - 9/5/2017
995.440000	---	29.96	53.00	23.04	1000.0	120.000	H	26.3	22:55:25 - 9/5/2017

Remark	

Measurement data(RE 300-1000MHz Ver)	☐	**Horizontal**	☒	**Vertical**
Operating mode / voltage	Mode 1 / DC 12V			

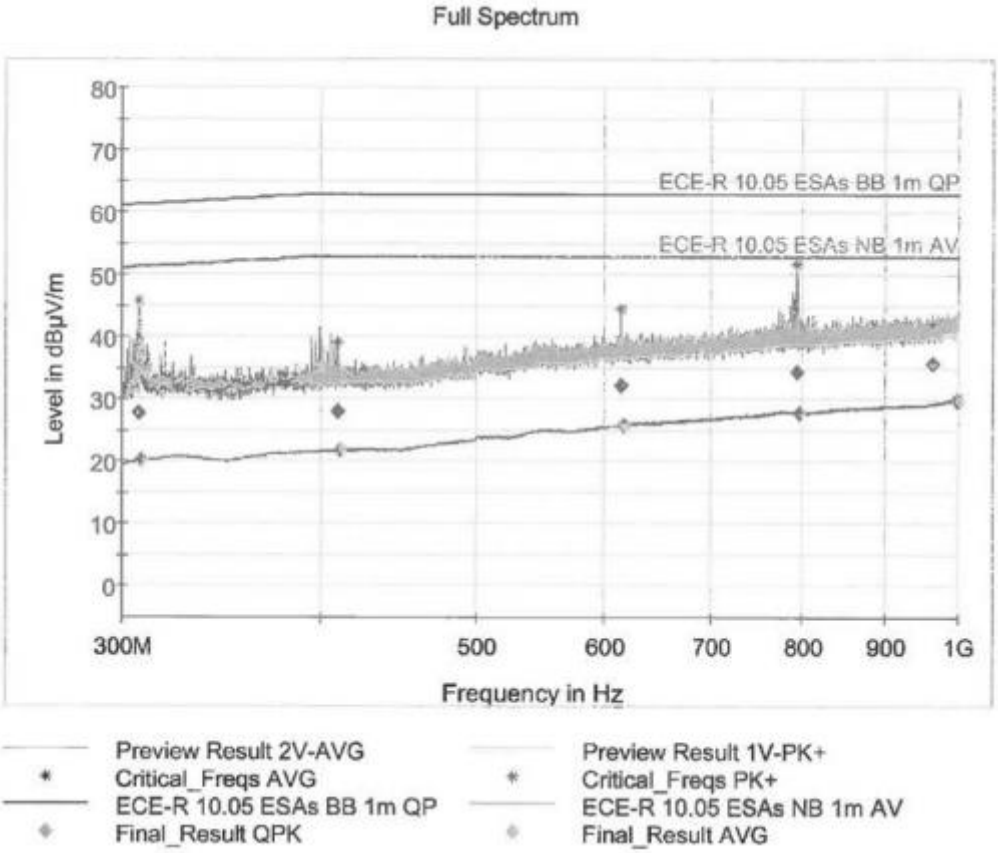

Final_Result

Frequency (MHz)	QuasiPeak (dBµV/m)	Average (dBµV/m)	Limit (dBµV/m)	Margin (dB)	Meas. Time (ms)	Bandwidth (kHz)	Pol	Corr. (dB)	Comment
307.320000	27.75	---	61.27	33.52	1000.0	120.000	V	16.6	23:07:40 - 9/5/2017
308.700000	---	20.22	51.30	31.08	1000.0	120.000	V	16.7	23:08:33 - 9/5/2017
409.180000	27.96	---	63.00	35.04	1000.0	120.000	V	18.4	23:07:51 - 9/5/2017
410.680000	---	21.78	53.00	31.22	1000.0	120.000	V	18.4	23:08:43 - 9/5/2017
614.700000	32.23	---	63.00	30.77	1000.0	120.000	V	22.1	23:08:01 - 9/5/2017
616.980000	---	25.86	53.00	27.14	1000.0	120.000	V	22.2	23:08:53 - 9/5/2017
793.840000	34.51	---	63.00	28.49	1000.0	120.000	V	24.1	23:08:12 - 9/5/2017
797.080000	---	27.80	53.00	25.2	1000.0	120.000	V	24.1	23:09:03 - 9/5/2017
961.960000	35.84	---	63.00	27.16	1000.0	120.000	V	25.6	23:08:23 - 9/5/2017
997.420000	---	29.91	53.00	23.09	1000.0	120.000	V	26.3	23:09:13 - 9/5/2017

Remark	

4.2. Conducted transient disturbances	VERDICT: In Compliance

Standard / Regulation	EN 50498-2010，BS EN 50498-2010			
Port under test	☒	DC mains input power	☐	Other:
Limits	Table 3 – Limits of transient disturbances			

Polarity of pulse amplitude	Maximum allowed pulse amplitude for	
	vehicles with 12 V systems	vehicles with 24 V systems
Positive	+ 75	+ 150
Negative	- 100	- 450

Performed measurements

Port under test	☒	DC mains input power	☐	Other:		
Voltage – Mains [V_{DC}]	☒	13.5	☐	27	☐	Other:
Test setup	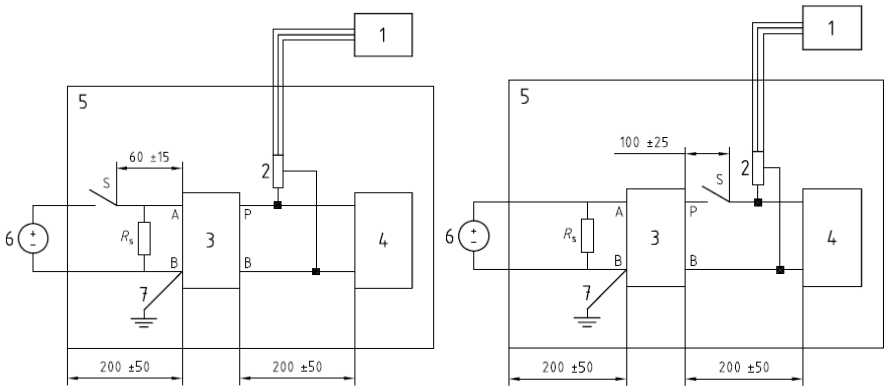 a) Slow pulses (millisecond range or slower) b) Fast pulses (nanosecond-to-microsecond range) Key: 1. Oscilloscope or equivalent 2. Voltage probe 3. Artificial network 4. DUT (source of transient) 5. Ground plane 6. Power supply 7. Ground connection; length <100 mm					
Test method applied	a. Turn on the measurement equipment and allow a sufficient time for stabilization. b. Calibration. Perform the measuring system checking using the measurement system check setup. c. Turn on the EUT and allow a sufficient time for stabilization. Make sure all the functions of DUT are normally before testing. d. EUT Testing. Perform the emission data scan using the measurement setup.					
Operating mode(s) used	Mode 1					
Remark	---					

Measurement data	Port under test	DC mains input power
Operating mode / voltage	Mode 1 / 12Vdc	

DUT	ELECTRIC AIR PUMP	Test Time	2017.09.02
Temperature	24°C	Test Voltage	DC 12V
Barometer Pressure	100kPa	Humidity	52%RH
Test Mode	Mode 1		

Polarity of pulse amplitude	Maximum allowed pulse amplitude for vehicles with 12V systems (V)		Test results	
	Slow Limit	Fast Limit	Slow pulse(V)	Fast pulse(V)
Positive	+75	+75	0	0
Negative	-100	-100	-23.3	-23.3
Test Determine			Complied	Complied

Remark	

5. IMMUNITY TEST RESULTS

5.1. Functional performance status classification

Class A: All functions of a device/system perform as designed during and after exposure to disturbance.

Class B: All functions of a device/system perform as designed during exposure. However, one or more of them can go beyond specified tolerance. All functions return automatically to within normal limits after exposure is removed. Memory functions shall remain class A.

Class C: One or more functions of a device/system do not perform as designed during exposure but return automatically to normal operation after exposure is removed.

Class D: One or more functions of a device/system do not perform as designed during exposure and do not return to normal operation until exposure is removed and the device/system is reset by simple “operator/use” action.

Class E: One or more functions of a device/system do not perform as designed during and after exposure and cannot be returned to proper operation without repairing or replacing the device/system.

5.2. Manufacturer defined performance criteria

Not provided.

5.3. Monitored - Checked

N/A

5.4. Conducted transient immunity	**VERDICT: In Compliance**

Standard	EN 50498-2010，BS EN 50498-2010
Port under test	DC mains power input
Test setup	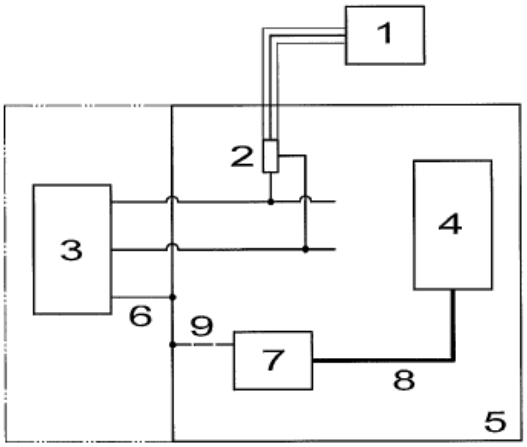 **a) Pulse adjustment** **Key** 1 oscilloscope or equivalent 2 voltage probe 3 test pulse generator 4 DUT disconnected 5 ground plane 6 DC power ground connection; maximum length for test pulse 3 is 100 mm 7 load simulator (connected to ground plane if required) 8 interconnect cable routed away from DUT power leads under test to avoid coupling 9 load simulator ground (if required) **Figure 2 — Transient immunity test set-up** (*continued*)

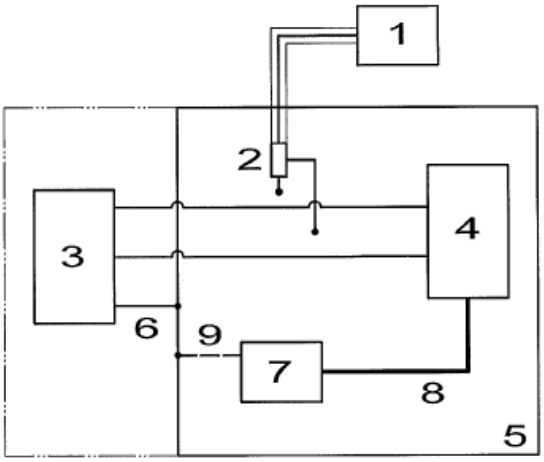

b) Pulse injection

Key
1 oscilloscope or equivalent
2 voltage probe disconnected
3 test pulse generator
4 DUT
5 ground plane
6 DC power ground connection; maximum length for test pulse 3 is 100 mm
7 load simulator (connected to ground plane if required)
8 interconnect cable routed away from DUT power leads under test to avoid coupling
9 load simulator ground (if required)

Figure 2 — Transient immunity test set-up

Test Procedure

a. Turn on the measurement equipment and allow a sufficient time for stabilization.
b. Calibration. Perform the measuring system checking using the measurement system check setup.
c. Turn on the DUT and allow a sufficient time for stabilization. Make sure all the functions of DUT are normally before testing.
d. DUT Testing. Perform the test with the setup and record the status of DUT.

Limits

Test Pulse	Voltage(V)	Test cycle/time	Performance Criteria
1	-75V	5000 pulses	D
2a	+37V	5000 pulses	D
2b	+10V	10 pulses	D
3a	-112V	1h	D
3b	+75V	1h	D
4	-6V	10 pulses	D

Supplementary information:

Performed tests

DUT	ELECTRIC AIR PUMP	Test Date	2017.09.02
Temperature	24°C	Test Voltage	DC 12V
Barometer Pressure	100kPa	Humidity	52%RH
Test Mode	Mode 1		

Test Pulse	Test Level, Us(V)	Number of pulse or test time	Performance criterion	Test Result criterion	Result	Observation
1	-75V	5000 pulses	D	D	Complied	Note 3
2a	+37V	5000 pulses	D	B	Complied	Note 2
2b	+10V	10 pulses	D	D	Complied	Note 3
3a	-112V	1h	D	A	Complied	Note 1
3b	+75V	1h	D	A	Complied	Note 1
4	-6V	10 pulses	D	B	Complied	Note 2

Test setup photo(s)	Refer to the Annex 3 for test setup photo(s).
Observation(s)	Note 1: During and after the test, DUT works normally and can be degraded. Note 2: During the test of pulse 2a,4 the equipment under test abnormal working. After testing , it can return to work normally by itself. Note 3: During the test of pulse 1,2b the equipment under test abnormal working. After testing , it can return to work normally by manually.

6. ANNEX 1 - MEASUREMENT UNCERTAINTIES

Radiated disturbances
The maximum expanded uncertainty (K = 2) is evaluated as: 30MHz~ 1000MHz: 5.16

7. ANNEX 2 – USED EQUIPMENT

Radiated electromagnetic emissions

Kind of Equipment	Manufacturer	Type	S/N	Calibrated until
EMI Test Receiver	Rohde&Schwarz	ESU26	100209	16.Mar.2018
Preamplifier	Miteq	AM-1309	1510390	16.Mar.2018
Preamplifier	Miteq	AFS42-00101800-25-S-42	1101599	16.Mar.2018
Bi-conical Antenna	Schwarzbeck	VHBB9124	684	04.Dec.2017
Log-Periodical Antenna	Schwarzbeck	VULP9118A	461	16.Mar.2018
Artificial Network	Rohde&Schwarz	ESH3-Z6	100290	16.Mar.2018
Artificial Network	Rohde&Schwarz	ESH3-Z6	100291	16.Mar.2018
CISPR 25 Chamber	Albatross Project	B83117-A1431-T161	22611	16.Mar.2018

Conducted Transients Emissions

Kind of Equipment	Manufacturer	Type	S/N	Calibrated until
Artificial Network	Schwarzbeck	NNBM8125	1717	16.Mar.2018
Electronic Switch	EMTEST	BS200N	V0927104954	16.Mar.2018
Oscilloscope	RIGOL	DS1104B	DS1BC17120002	16.Mar.2018
Voltage Probe	Tektronix	P5100	1.604I	16.Mar.2018

Conducted Transients Immunity

Kind of Equipment	Manufacturer	Type	S/N	Calibrated until
Transient Generator	EMTEST	UCS 200N	V0820103743	16.Mar.2018
Load Dump Generator	EMTEST	LD 200N	V0927104957	16.Mar.2018
Voltage Drop Simulator (Used also as the power supply)	EMTEST	VDS 200N	V0927104953	16.Mar.2018
0.5ohm Resistor	--	--	--	24.Jun.2018
Oscilloscope	Tektronix	DPO4054	B010438	16.Mar.2018

8. ANNEX 3 - TEST PHOTOS

Radiated disturbances
Hor 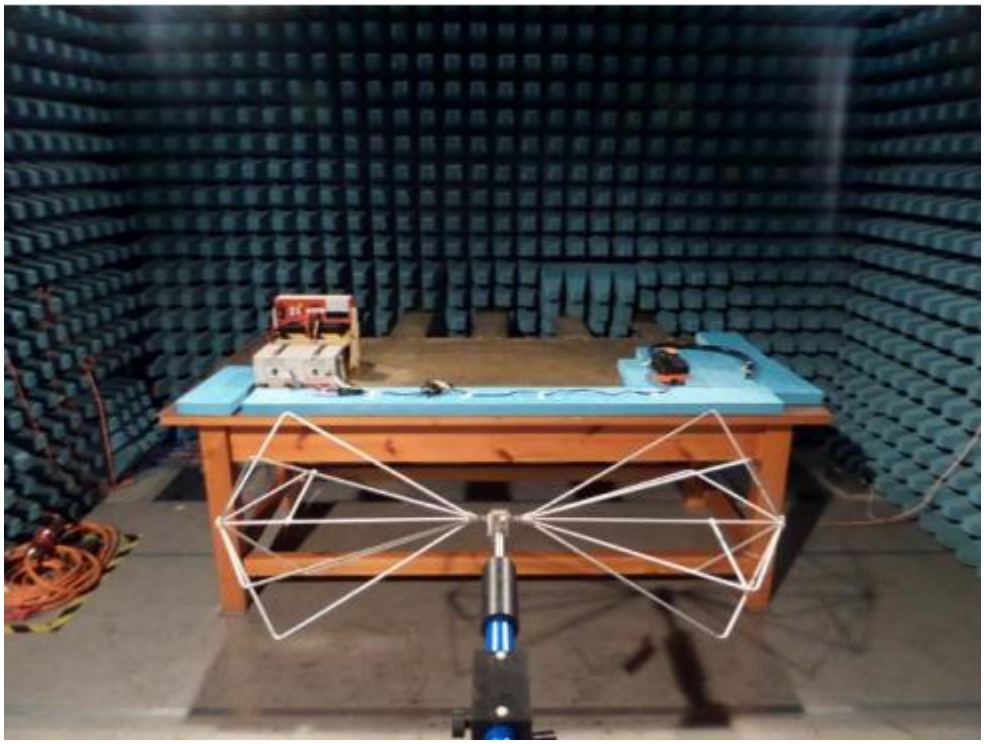
Ver 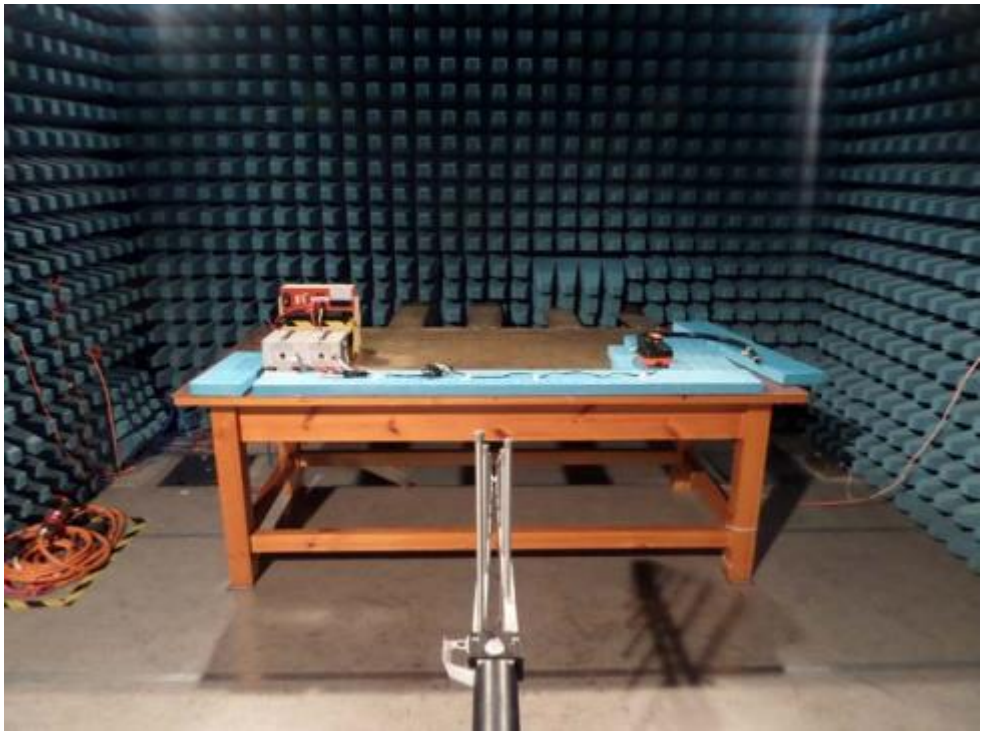

Conducted transient disturbances


Conducted transient immunity
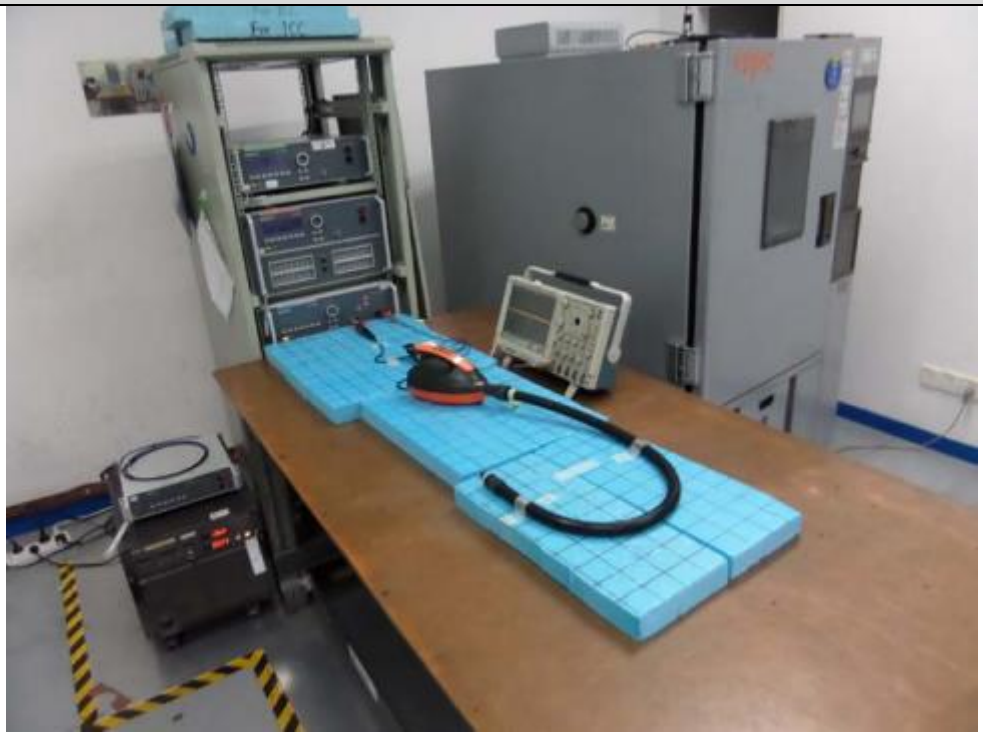

----------END----------